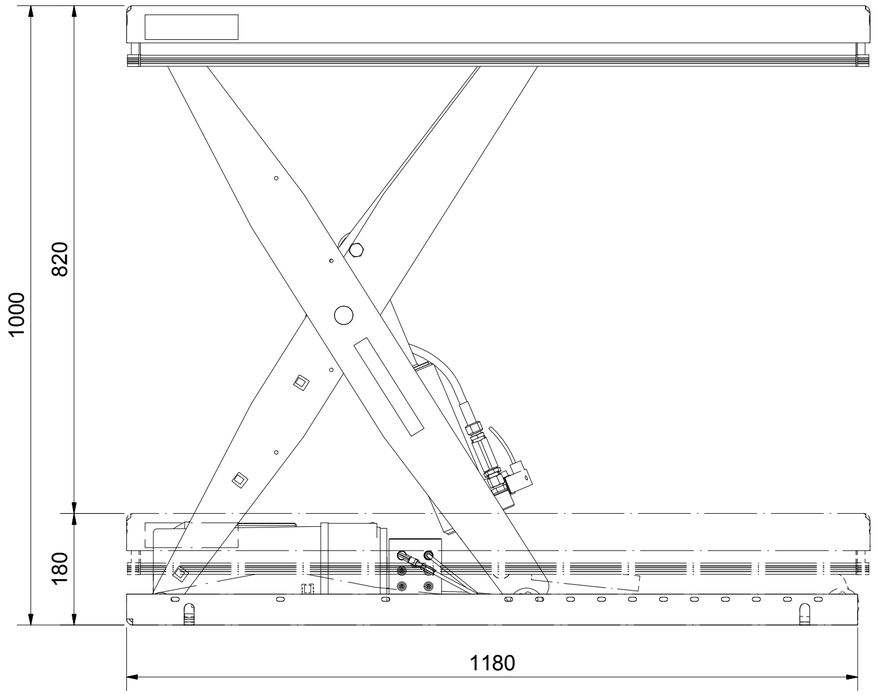

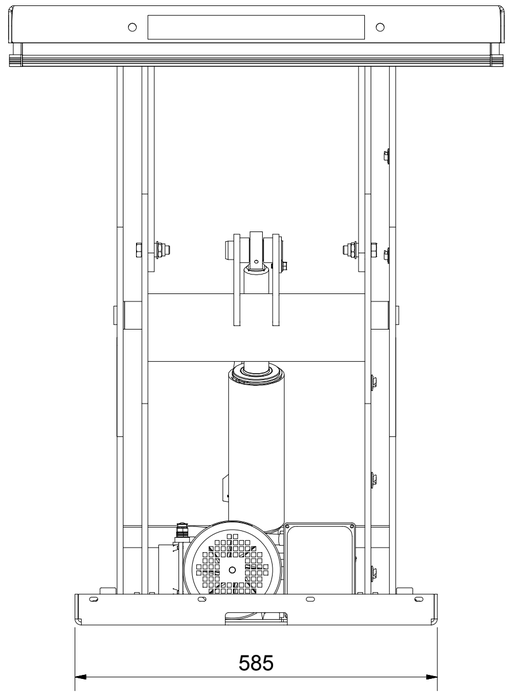

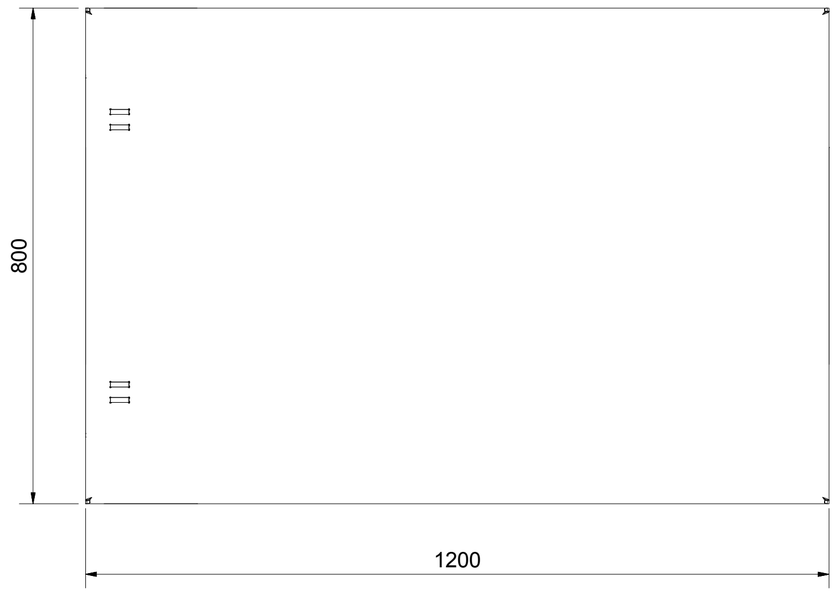

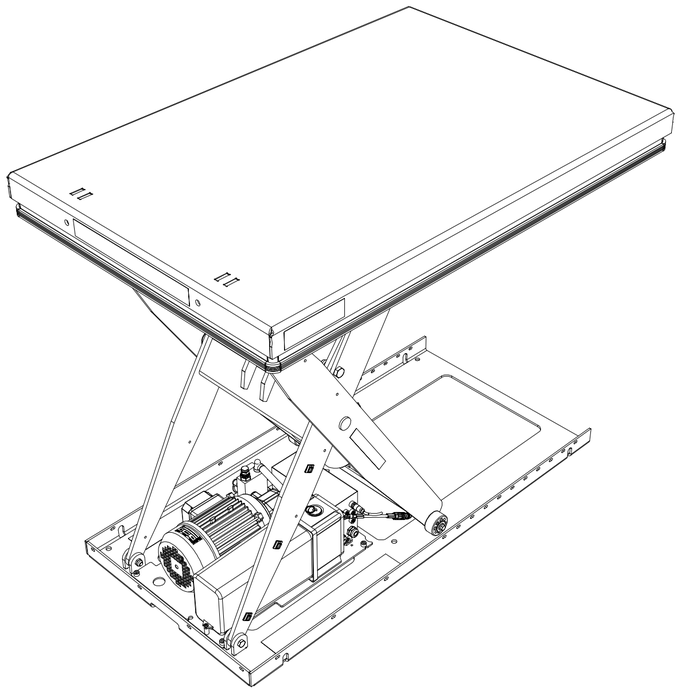

This document must not be copied without our written permission, and the contents thereof must not be imparted to a third party nor be used for any unauthorized purpose. Contravention will be prosecuted.

EdmoLift® www.edmolift.se	CL 1001 (1200x800) www.edmolift.com	Drawing no 36045